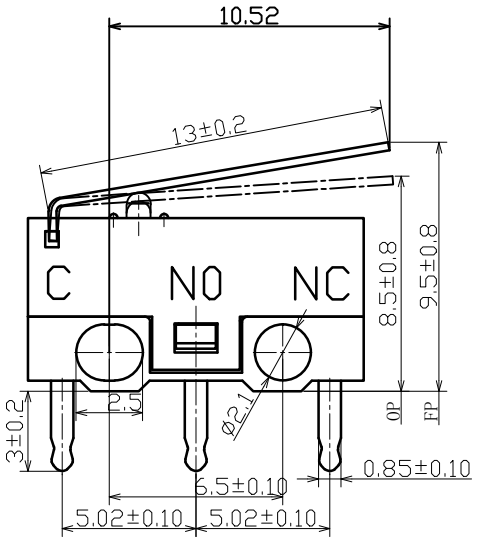

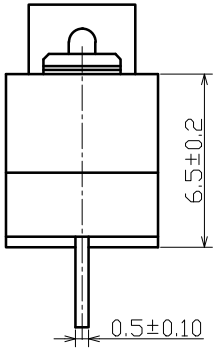

ITEM	PART NAME	MATERIAL	COLOR
1	CONTACT	Ag Alloy	
2	MOVABLE PLATE	PHOSPHOR COPPER	
3	BUTTON	POM	RED
4	HANDLE	SUS	
5	COVER	PA	BLACK
6	BASE	PPA	
7	TERMINAL	SILVER PLATE BRASS	

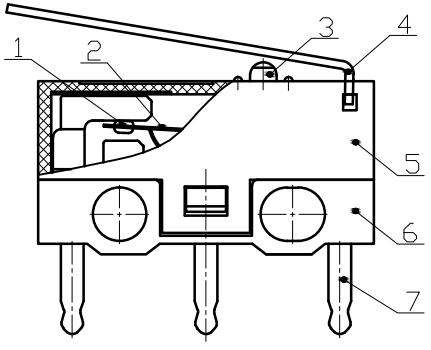

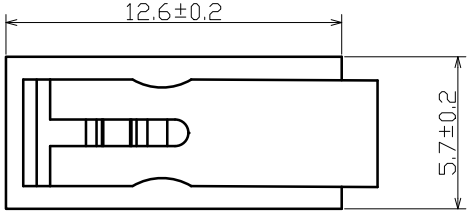

SCHEMATIC

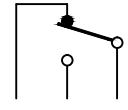

NC NO COM

Rating	5VDC 100mA
Contact Resistance	100mΩ Max
Insulation Resistance	50MΩ Min
Dielectric Voltage	250VAC 60±5S
Endurance	50,000 cycles
Operating Force	35±15gf
Pre-travel	2.0±0.8mm